Flat

5970

Design By Ichiro Iwasaki

The Flat table lamp offers multiple functionality; material and light are integrated in a single body. The Flat collection contains various planes of light that rise up to become self-illuminating supports.

Model Sheet





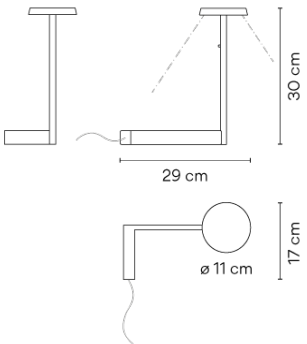

Finish	11 Black NCS S 8500N 37 Terra Red NCS S 4040-Y70R 47 Green L1 NCS S 4005-G80Y
LED	2700 K
Control	PUSH
Electrical connection	Plug-in
Light source	1 x LED PLATE 7W 400mA F
LED	CRI>90 682 lm 97.42
Driver	Constant Current 400 mA 100~240 V 50/60 Hz □ F Dimmer LED IP20 Multi-volt 50-60Hz
	5970 _ _ / _ 5 Push (with or without memory)
Remarks	24V transformer at plug
Application	Floor and Table
Packaging	1 Box 0.425 m x 0.365 m x 0.247 m Gross weigth 2.1 kg Net weigth 1.11 kg Vol. 0.0383 m3

Lighting effect

Reflected

Creation of visual hierarchies within the luminaire itself, emphasising the materiality and texture of the



Photometric Data

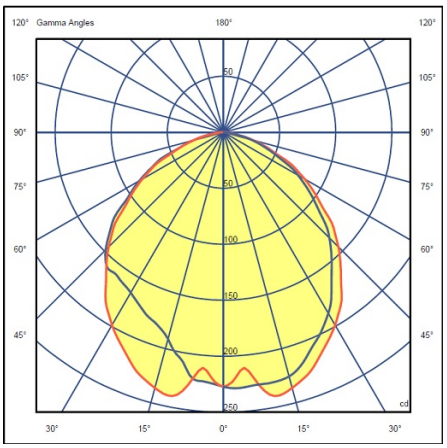

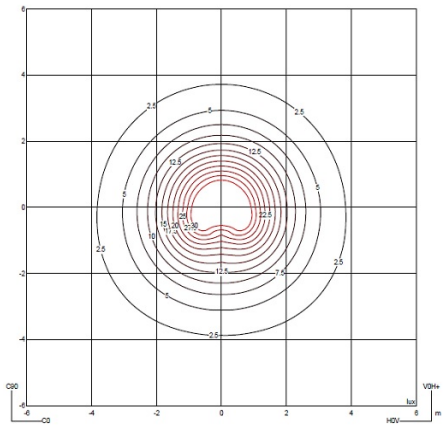

Efficiency	67.88 lm/W
Total Flux	598.17 lm
Maximum Value	239.87 cd

All of our products come with a five-year warranty. Check our legal terms at www.vibia.com/warranty

Vibia Lighting, S.L.U.

Office / Oficina
Progrés 4-6, 08850 Gavà. Barcelona, Spain.

International T +34 934 796 971
Spain / Portugal T +34 934 796 970

customer.service@vibia.com
vibia.com